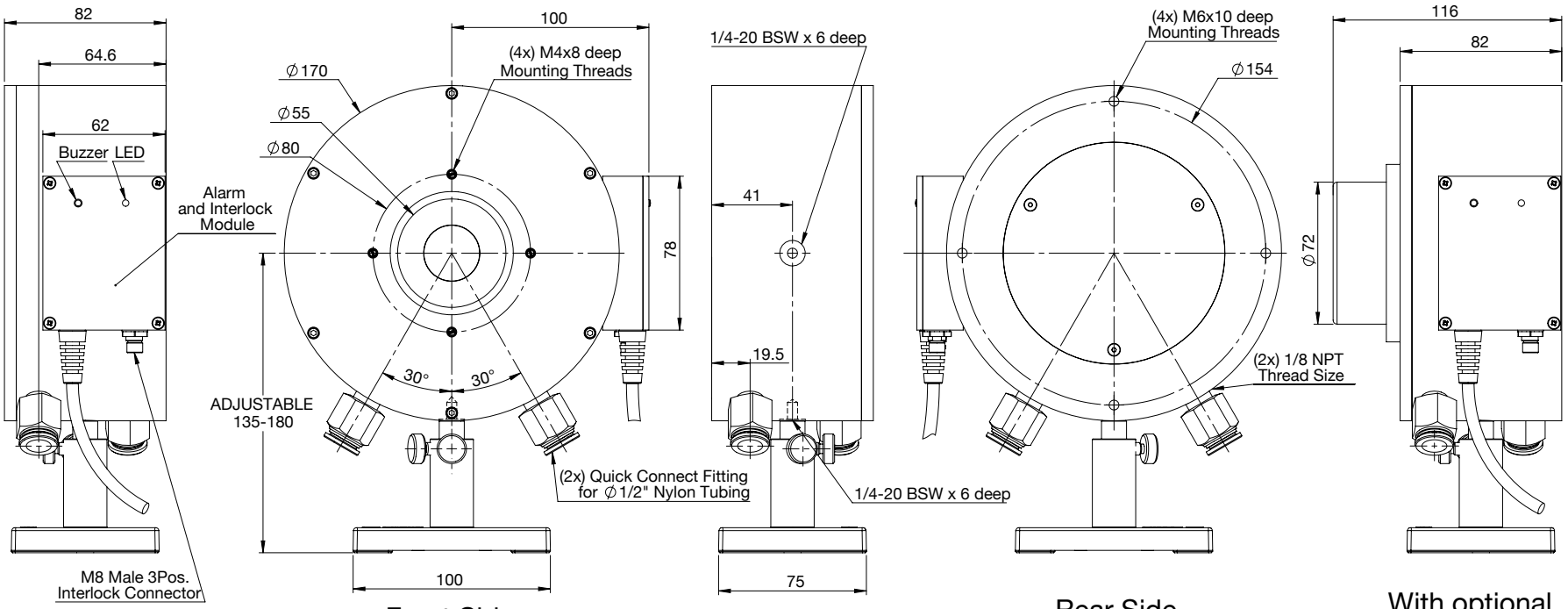
82
64.6
62
Buzzer LED
Alarm
and Interlock
Module
M8 Male 3Pos.
Interlock Connector
100
(4x) M4x8 deep
Mounting Threads
∅170
∅55
∅80
78
30°
30°
ADJUSTABLE
135-180
(2x) Quick Connect Fitting
for ∅1/2" Nylon Tubing
100
Front Side
1/4-20 BSW x 6 deep
41
19.5
1/4-20 BSW x 6 deep
75
(4x) M6x10 deep
Mounting Threads
∅154
(2x) 1/8 NPT
Thread Size
Rear Side
116
82
∅72
With optional
scatter shield

Ophir®